PUBLISHED: 21-NOV-2016
2022.0 DEFENDER (LE), 307-01

AUTOMATIC TRANSMISSION/TRANSAXLE - VEHICLES WITH: 8HP70 8-SPEED AUTOMATIC TRANSMISSION AWD

TRANSMISSION FLUID LEVEL CHECK

(G1976222)

GENERAL PROCEDURES

44.24.06	LUBRICATION SYSTEM - CHECK AND TOP UP	3000 CC, TDV6	0.7	USED WITHINS

SPECIAL TOOL(S)

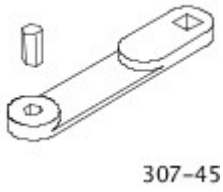

307-452

Wrench, Transmission Filler Plug

CHECK

transmissionmanuals.com

WARNING:

Observe due care when draining, as the fluid can be very hot.

1.
   - The following steps must be observed before starting the transmission fluid level check.
   - The vehicle must be on a horizontal ramp.
   - Make sure that the electric park brake (EPB) is applied.
   - Make sure the transmission control switch (TCS) is in the Park (P) position.

2. Raise and support the vehicle.

3. 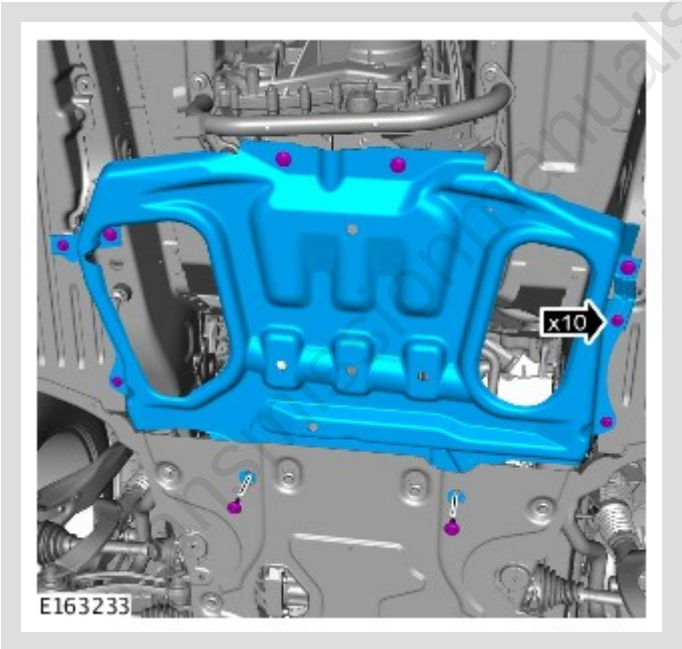

4.

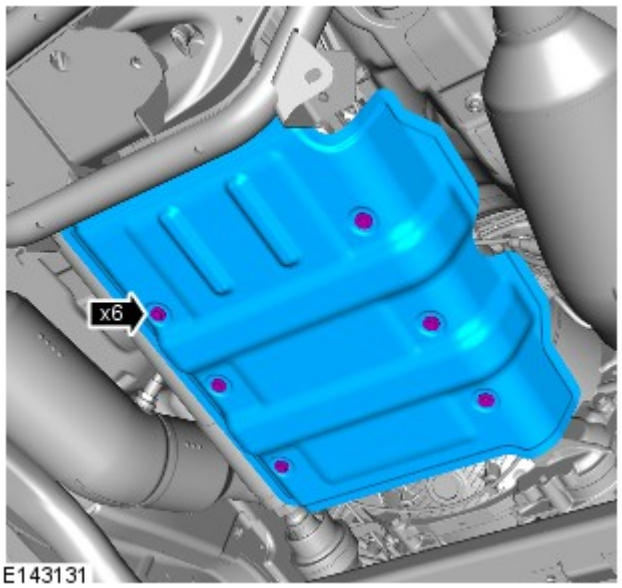

5. Lower the vehicle.

6.

NOTE:

Make sure that the transmission is not in the default mode, if this is the case, stop and correct the cause first and then restart the fluid level check.

1. Connect Land Rover approved diagnostic equipment to the vehicle.
1. Start the engine and allow to idle.
1. Switch off the air conditioning (A/C) system and other electrical components.

transmissionmanuals.com

7.

CAUTION:

Using Land Rover approved diagnostic equipment, make sure the transmission temperature is between 30°C (85°F) and 50°C (122°F) before starting the fluid level check.

- Apply and hold the brake pedal.
- Select reverse gear and wait for 10 seconds.
- Select drive, then manual 1st gear and wait for 10 seconds.
- Select 2nd gear and wait for 10 seconds.
- Select Park (P) on the TCS.

8.

- Raise the engine speed to 2000 rpm and hold for 30 seconds. Then return to idle speed.

9.

- Using Land Rover approved diagnostic equipment, check the transmission fluid temperature.
- If the transmission oil temperature is lower than 30°C (86°F). Allow the transmission to warm up above 30°C (86°F) with the engine idling in the P position, then proceed with the transmission fluid level check.
- If the transmission oil temperature is above 50°C (122°F), switch off the engine and allow the transmission to cool down, then repeat steps 7 and 8.

10. Raise and support the vehicle.

transmissionmanuals.com

11.

CAUTION:

Only continue with the fluid level check if the transmission temperature is between 30°C (86°C) and 50°C (122°).

NOTE:

Use a suitable container to collect escaping fluid.

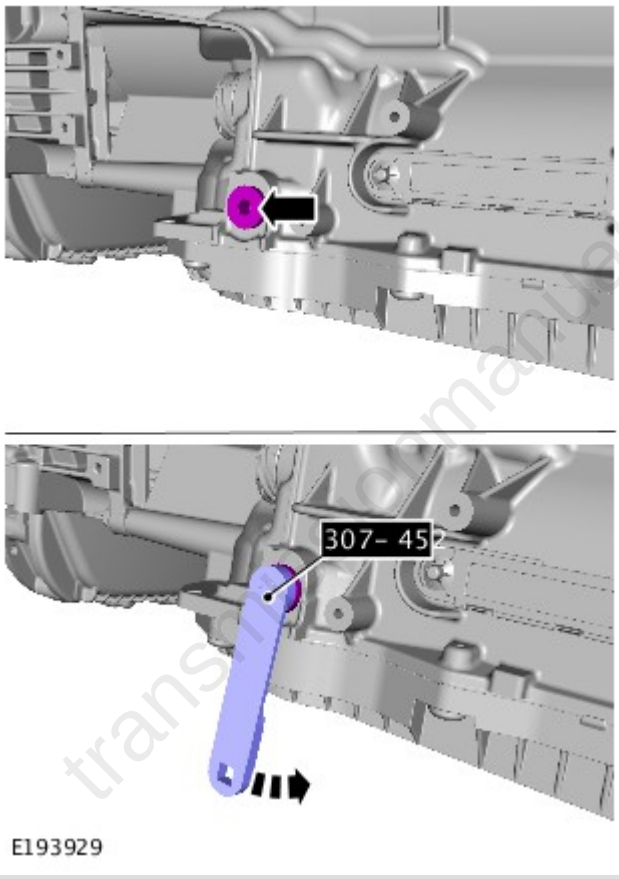

1. Remove the oil filler plug, do not discard.

1. If fluid flows out of the oil filler hole, proceed to step 13.

1. If fluid does not flow out of the oil filler hole, proceed to step 12
   Special Tool(s): 307-452

12.

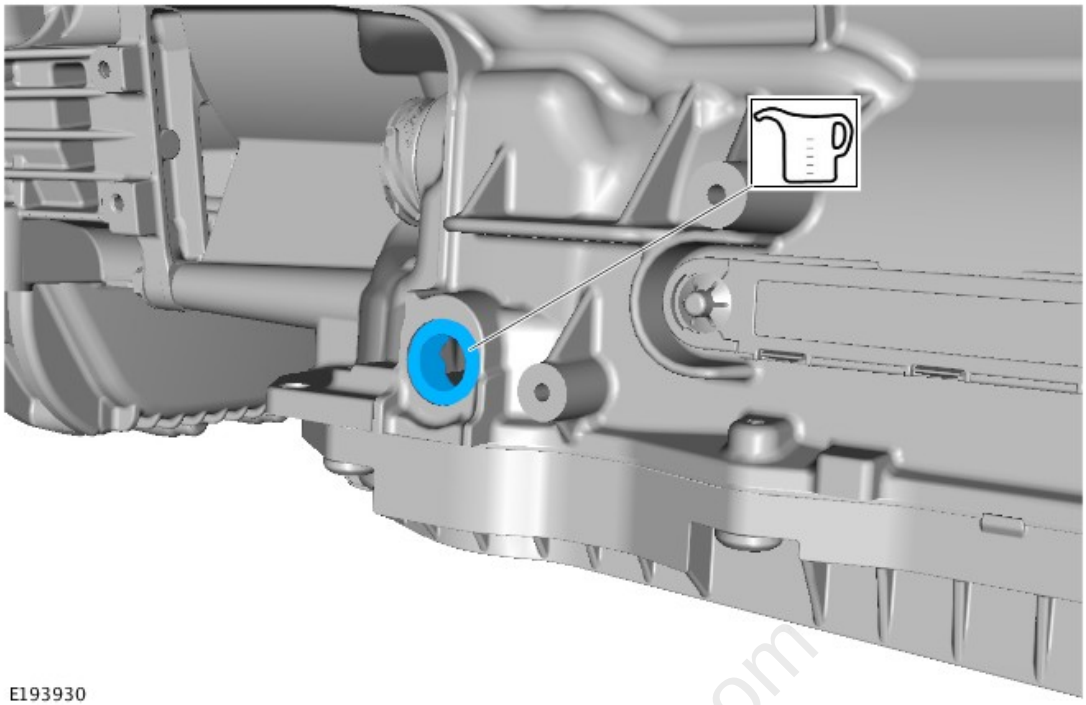

E193930

- Top up the transmission with the recommended transmission oil until fluid flows out of the oil filler hole. Refer to fluid specification.
  Refer to: Specifications (307-01A, Specifications).

13.

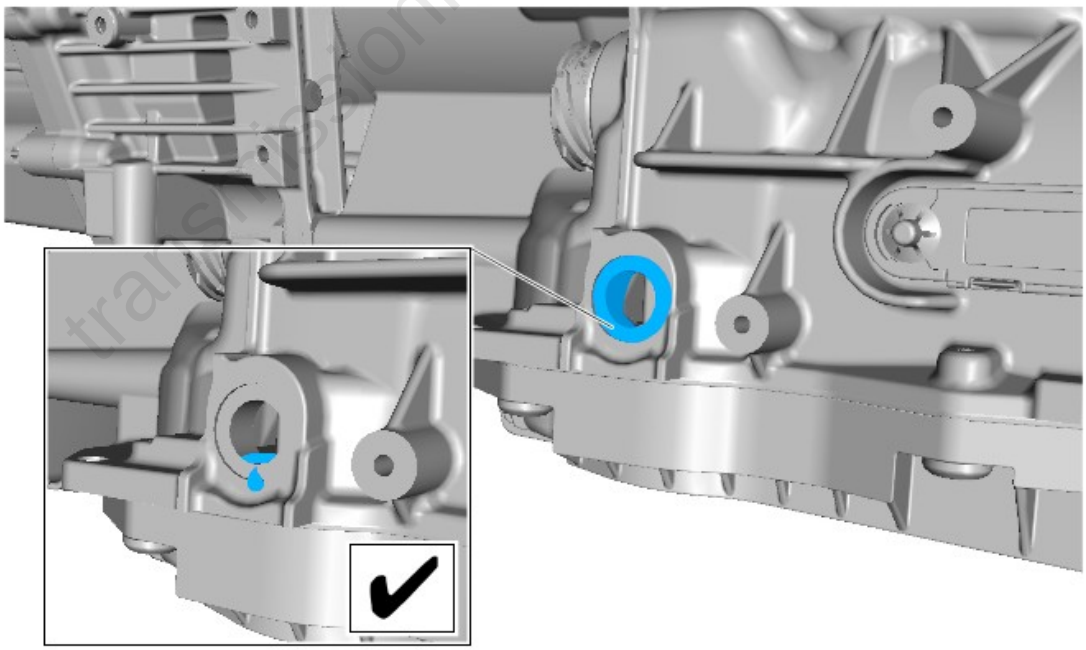

E193931

- Allow the transmission fluid to drain from the oil filler hole until the flow stops.

transmissionmanuals.com

14.

NOTE:

Install the original oil filler plug.

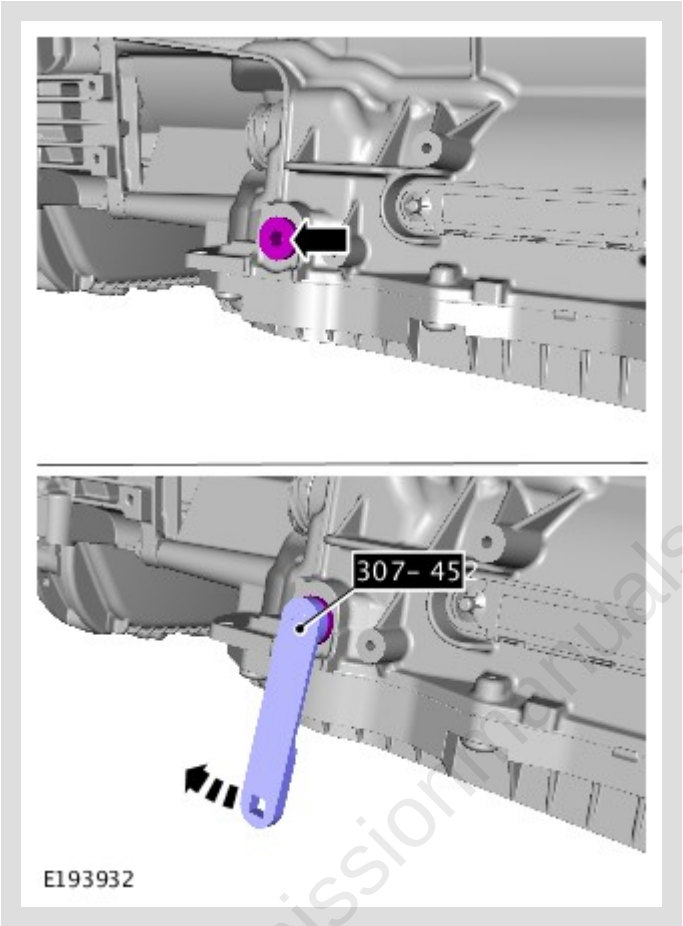

- Using the special tool, install the original oil filler plug.
- *Special Tool(s):* 307-452

transmissionmanuals.com

15.

CAUTION:

Make sure the transmission fluid fill plug is tightened to the correct specification. Failure to follow this instruction may result in damage to the transmission.

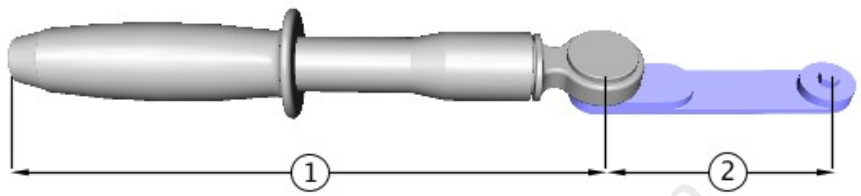

E194197

- To make sure the transmission fill plug is torqued to the correct specification. Using the special tool and torque wrench the following calculation steps must be followed.
- Step 1. Multiply 35 Nm by the effective length of the torque wrench (1).
- Step 2. Add the effective length of the special tool (2) to the effective length of the torque wrench (1).
- Step 3. Divide the total of step 1 by the total of step 2.
- Step 4. Set the torque wrench to the figure arrived at in step 3.
- Tighten the transmission fluid fill plug to the torque given by the calculation.

16.

- Remove the special tool.
  Special Tool(s): 307-452

17. Clean the area around the filler plug, wipe away any excess fluid and remove the container.

transmissionmanuals.com

18.

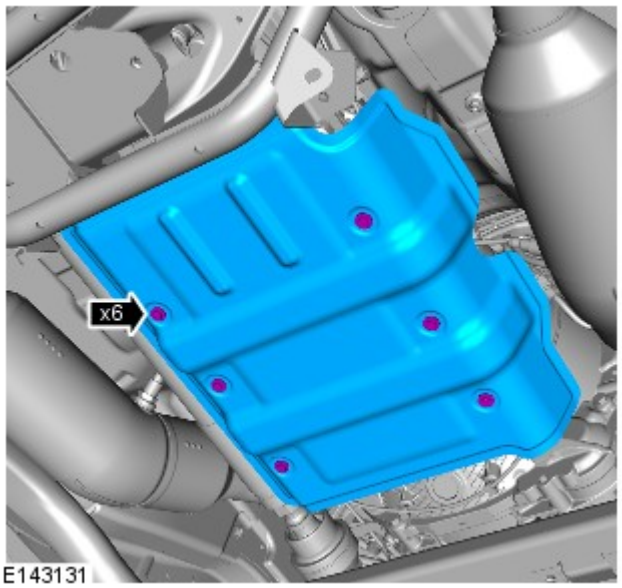

Torque: **9 Nm**

19.

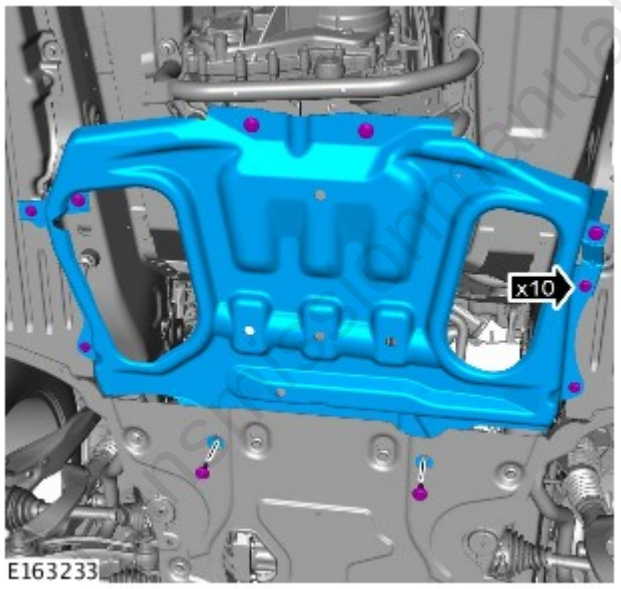

Torque:

M10 **60 Nm**

M6 **10 Nm**

20. Lower the vehicle.

21. Disconnect the Land Rover approved diagnostic equipment from the vehicle.

transmissionmanuals.com